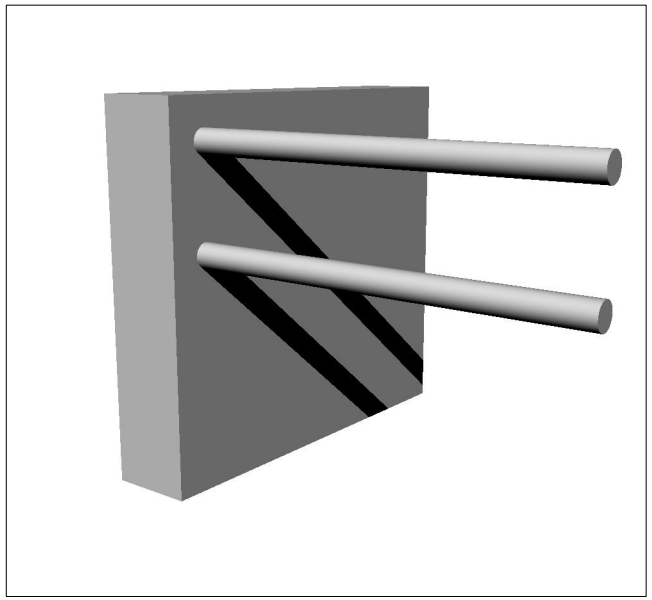

Sharp

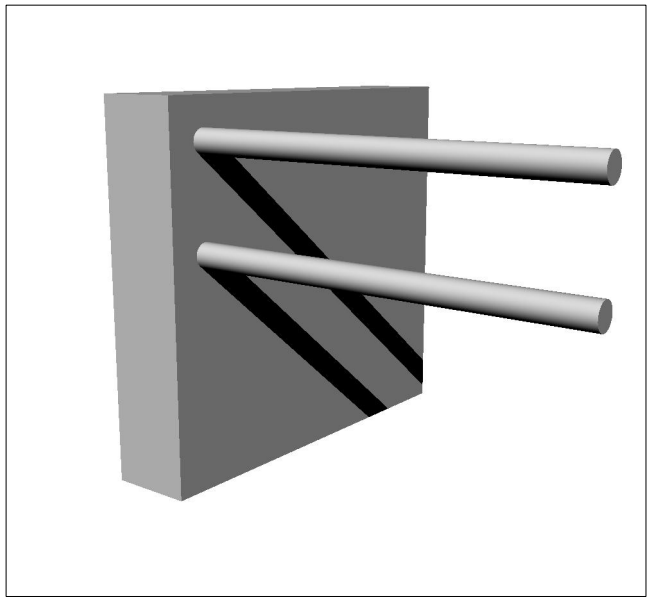

Soft (Area)